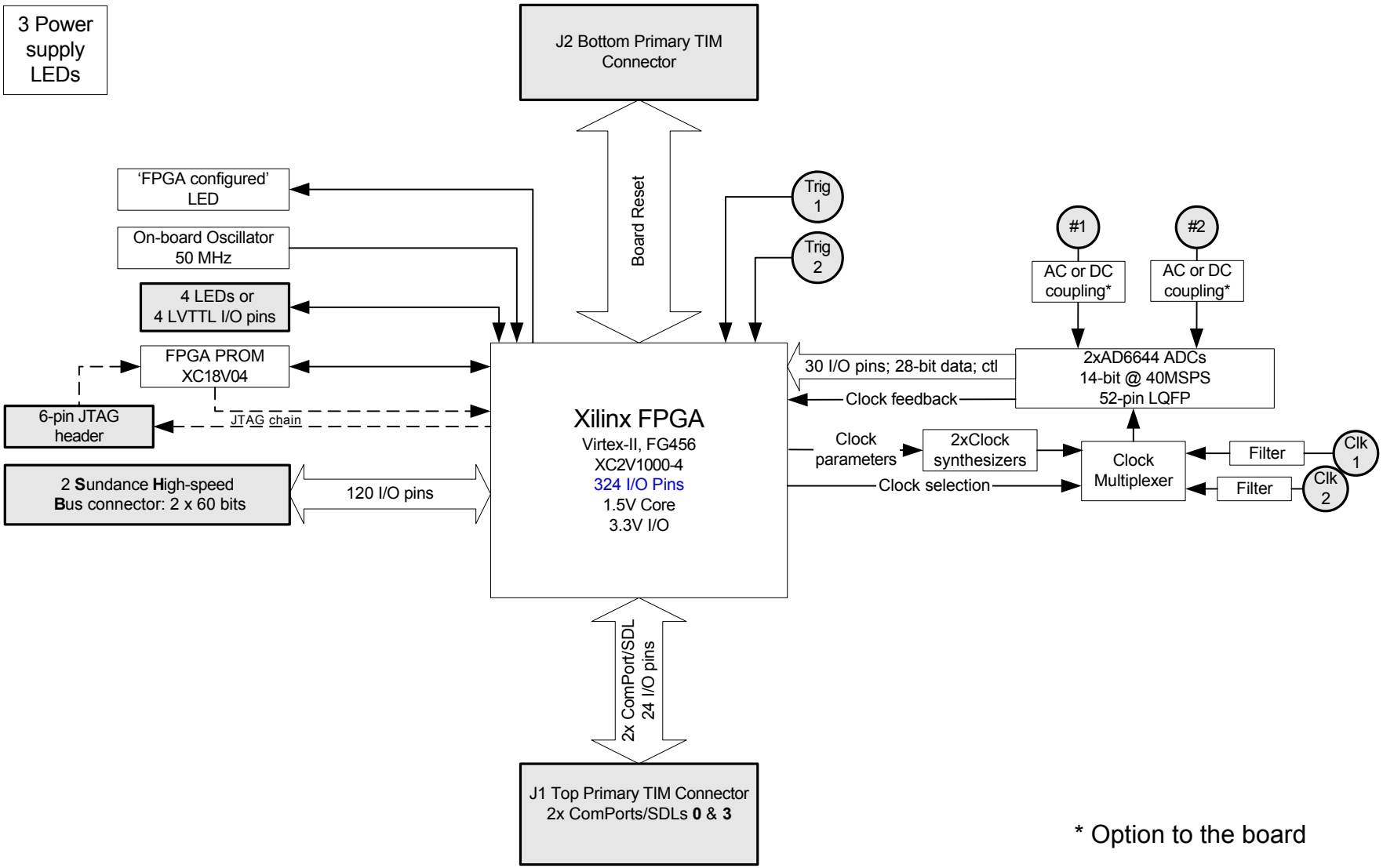


* Option to the board