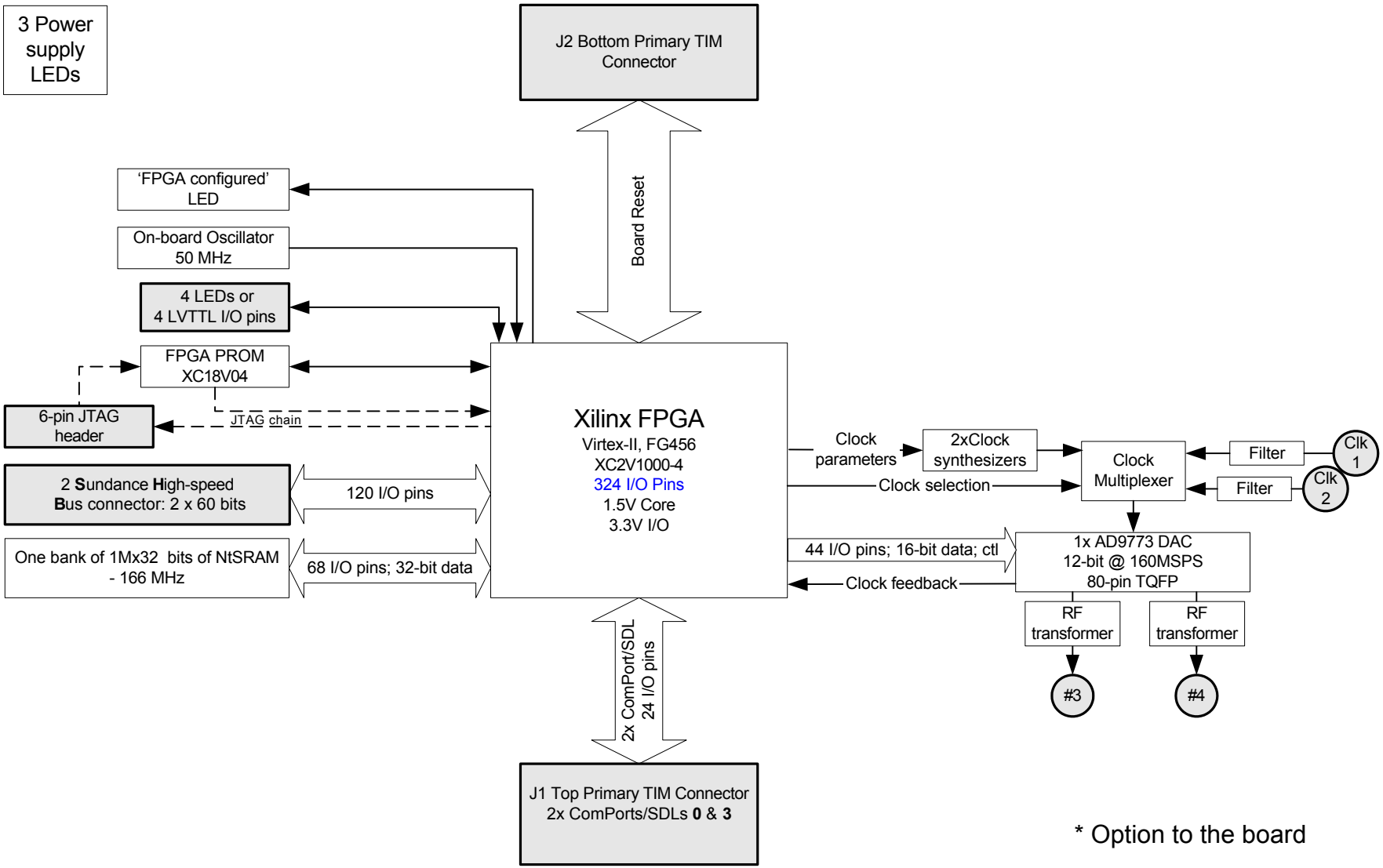

* Option to the board