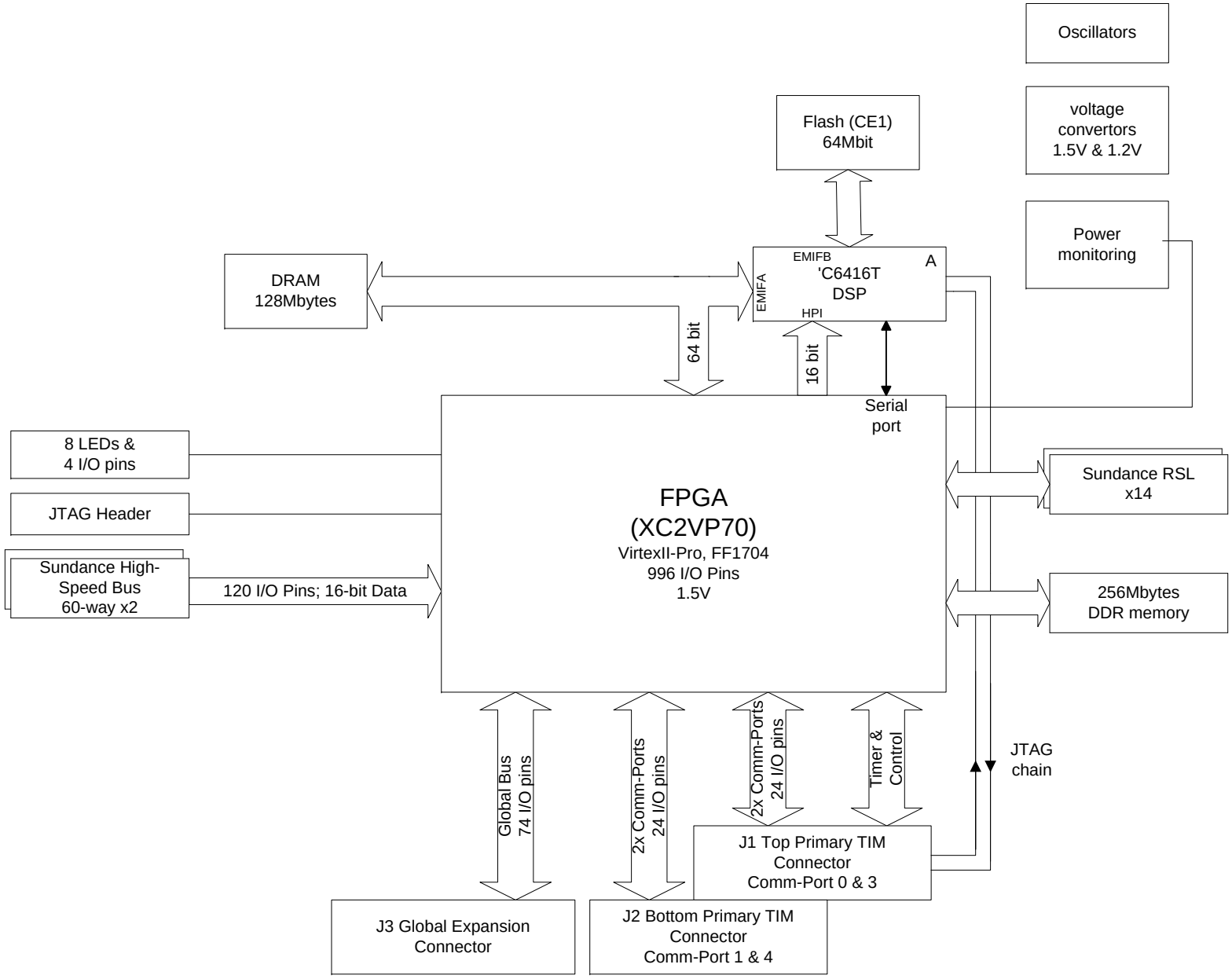
Oscillators
voltage convertors 1.5V & 1.2V
Flash (CE1) 64Mbit
Power monitoring
DRAM 128Mbytes
EMIFB
'C6416T DSP
A
EMIFA
HPI
64 bit
16 bit
Serial port
8 LEDs & 4 I/O pins
JTAG Header
Sundance High-Speed Bus 60-way x2
120 I/O Pins; 16-bit Data
FPGA (XC2VP70)
VirtexII-Pro, FF1704
996 I/O Pins
1.5V
Sundance RSL x14
256Mbytes DDR memory
Global Bus 74 I/O pins
2x Comm-Ports 24 I/O pins
2x Comm-Ports 24 I/O pins
Timer & Control
JTAG chain
J1 Top Primary TIM Connector Comm-Port 0 & 3
J3 Global Expansion Connector
J2 Bottom Primary TIM Connector Comm-Port 1 & 4