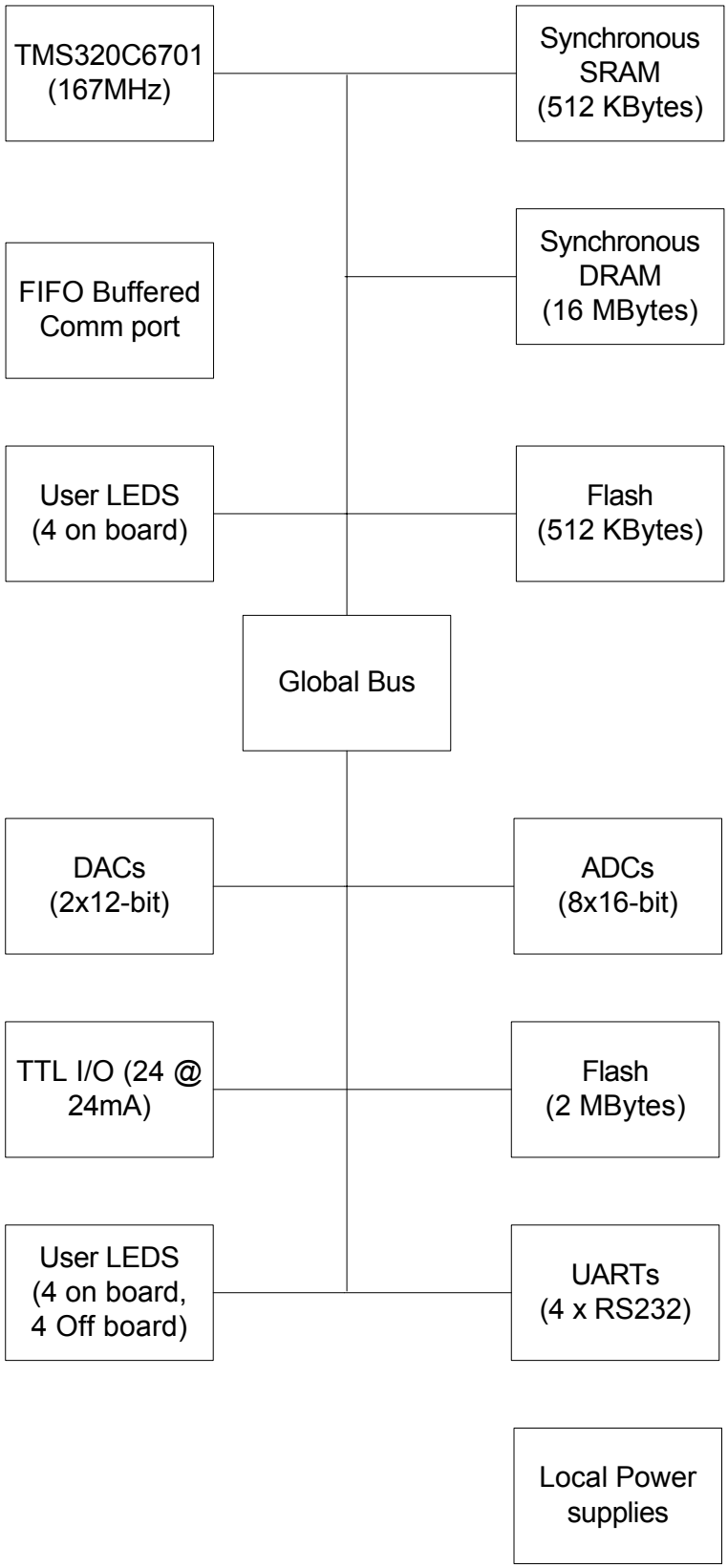
TMS320C6701
(167MHz)
Synchronous
SRAM
(512 KBytes)
FIFO Buffered
Comm port
Synchronous
DRAM
(16 MBytes)
User LEDS
(4 on board)
Flash
(512 KBytes)
Global Bus
DACs
(2x12-bit)
ADCs
(8x16-bit)
TTL I/O (24 @
24mA)
Flash
(2 MBytes)
User LEDS
(4 on board,
4 Off board)
UARTs
(4 x RS232)
Local Power
supplies