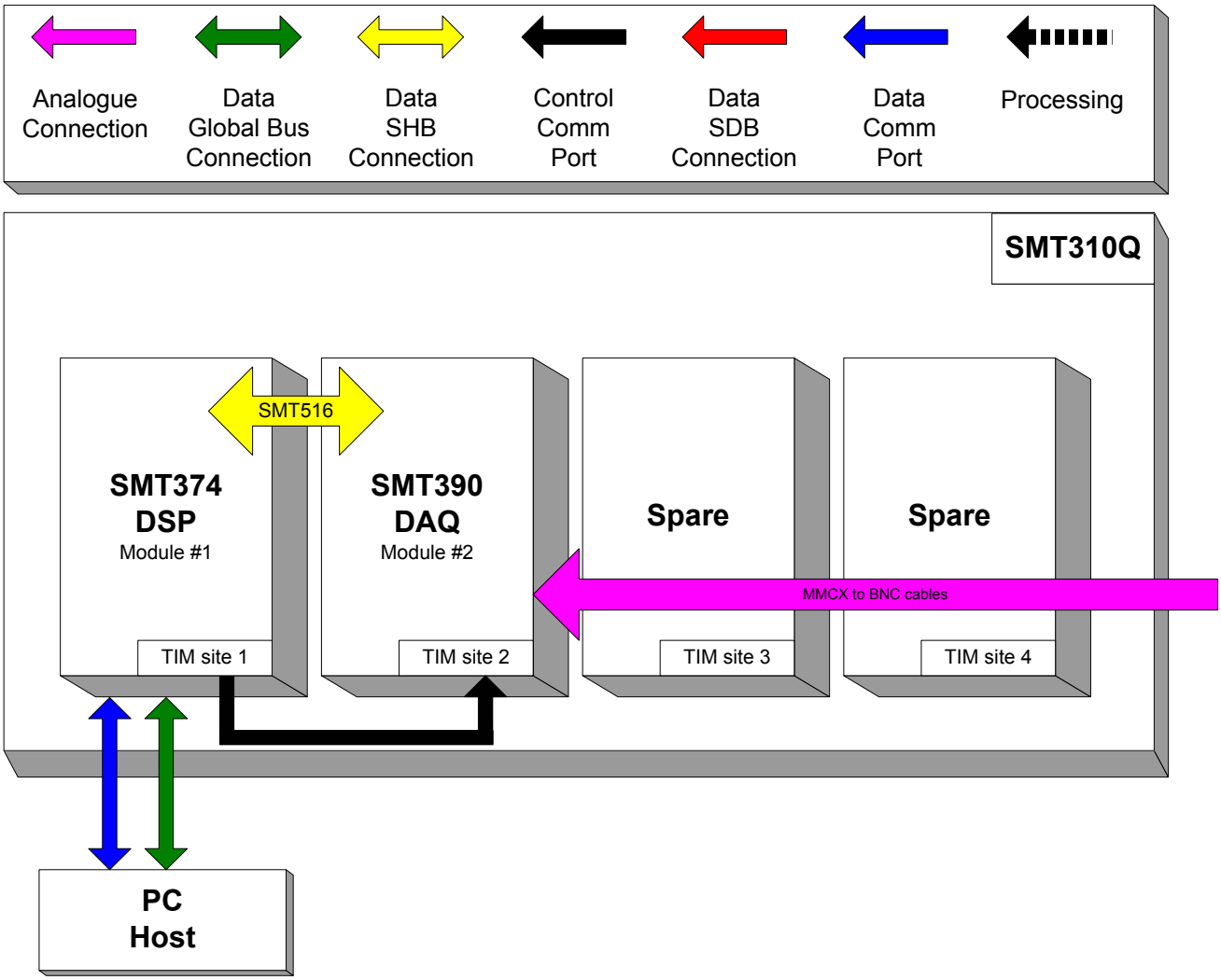
Analogue Connection
Data Global Bus Connection
Data SHB Connection
Control Comm Port
Data SDB Connection
Data Comm Port
Processing
SMT310Q
SMT516
SMT374 DSP
Module #1
SMT390 DAQ
Module #2
Spare
Spare
MMCX to BNC cables
TIM site 1
TIM site 2
TIM site 3
TIM site 4
PC Host