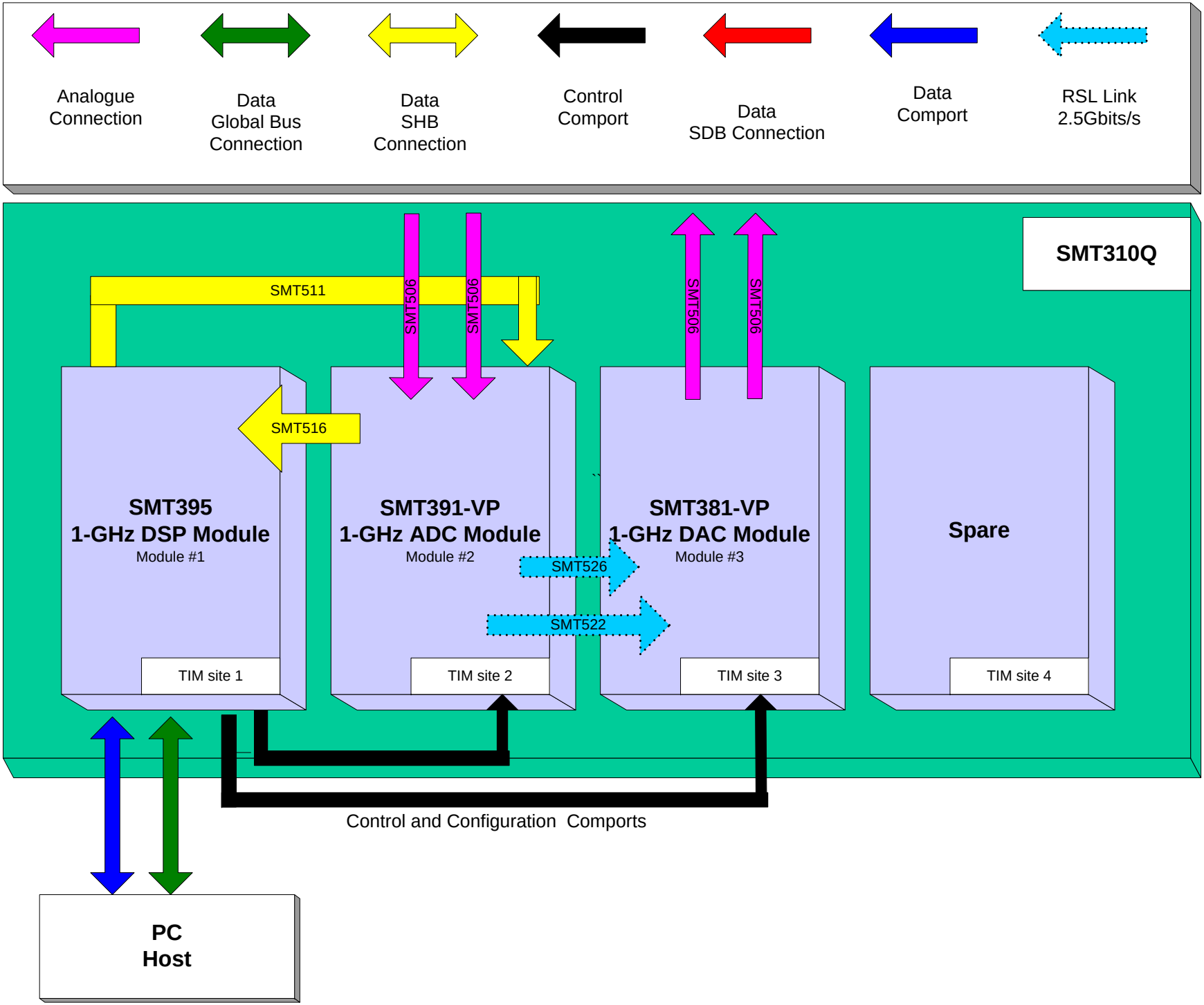
Analogue Connection
Data Global Bus Connection
Data SHB Connection
Control Comport
Data SDB Connection
Data Comport
RSL Link 2.5Gbits/s
SMT310Q
SMT511
SMT506
SMT506
SMT506
SMT506
SMT516
SMT395
1-GHz DSP Module
Module #1
SMT391-VP
1-GHz ADC Module
Module #2
SMT381-VP
1-GHz DAC Module
Module #3
Spare
SMT526
SMT522
TIM site 1
TIM site 2
TIM site 3
TIM site 4
Control and Configuration Comports
PC
Host