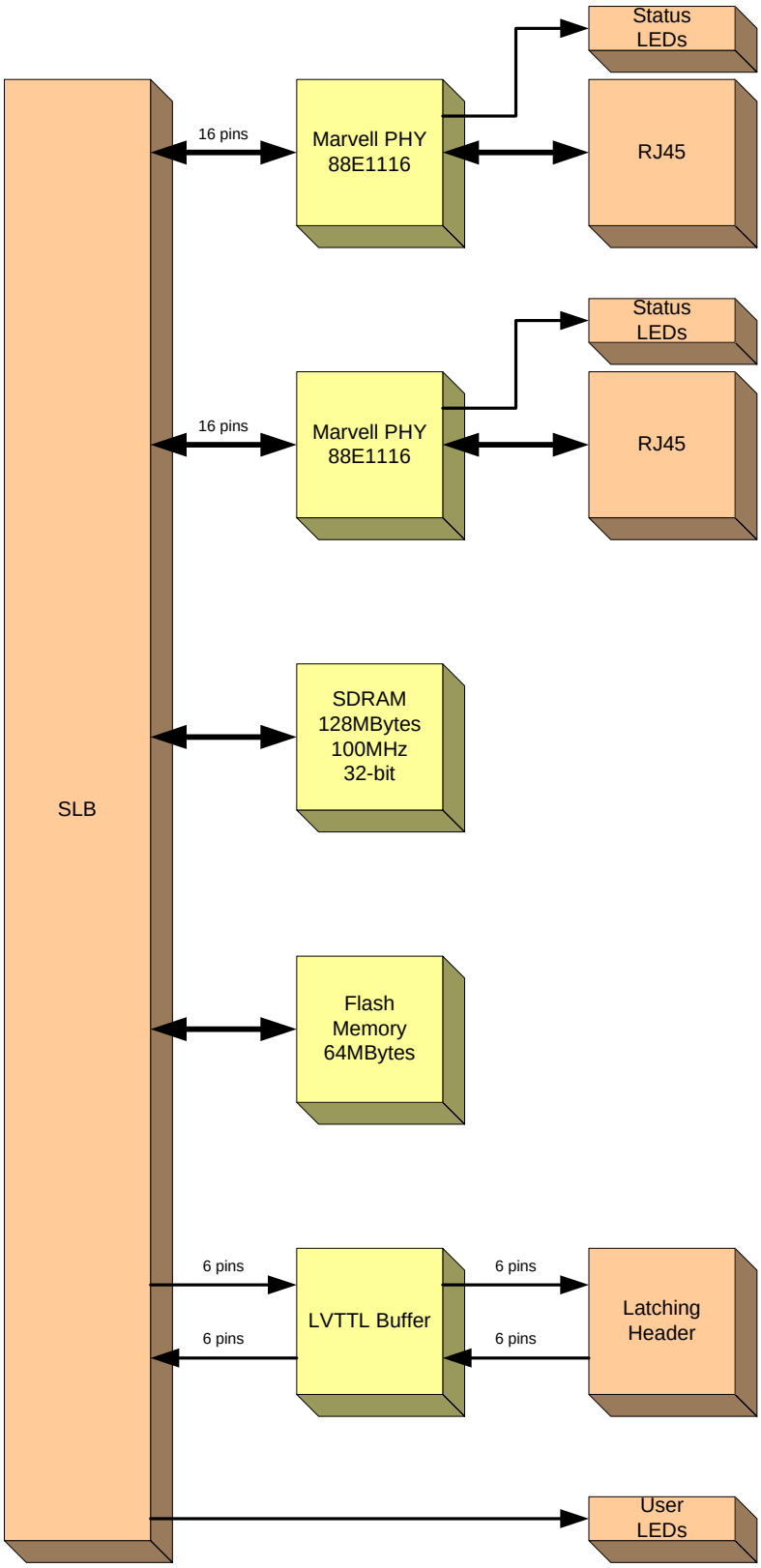
Status
LEDs
16 pins
Marvell PHY
88E1116
RJ45
Status
LEDs
16 pins
Marvell PHY
88E1116
RJ45
SDRAM
128MBytes
100MHz
32-bit
SLB
Flash
Memory
64MBytes
6 pins
6 pins
LVTTL Buffer
6 pins
6 pins
Latching
Header
User
LEDs